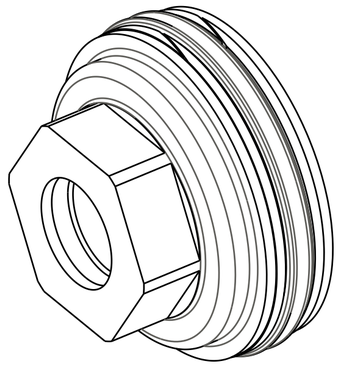

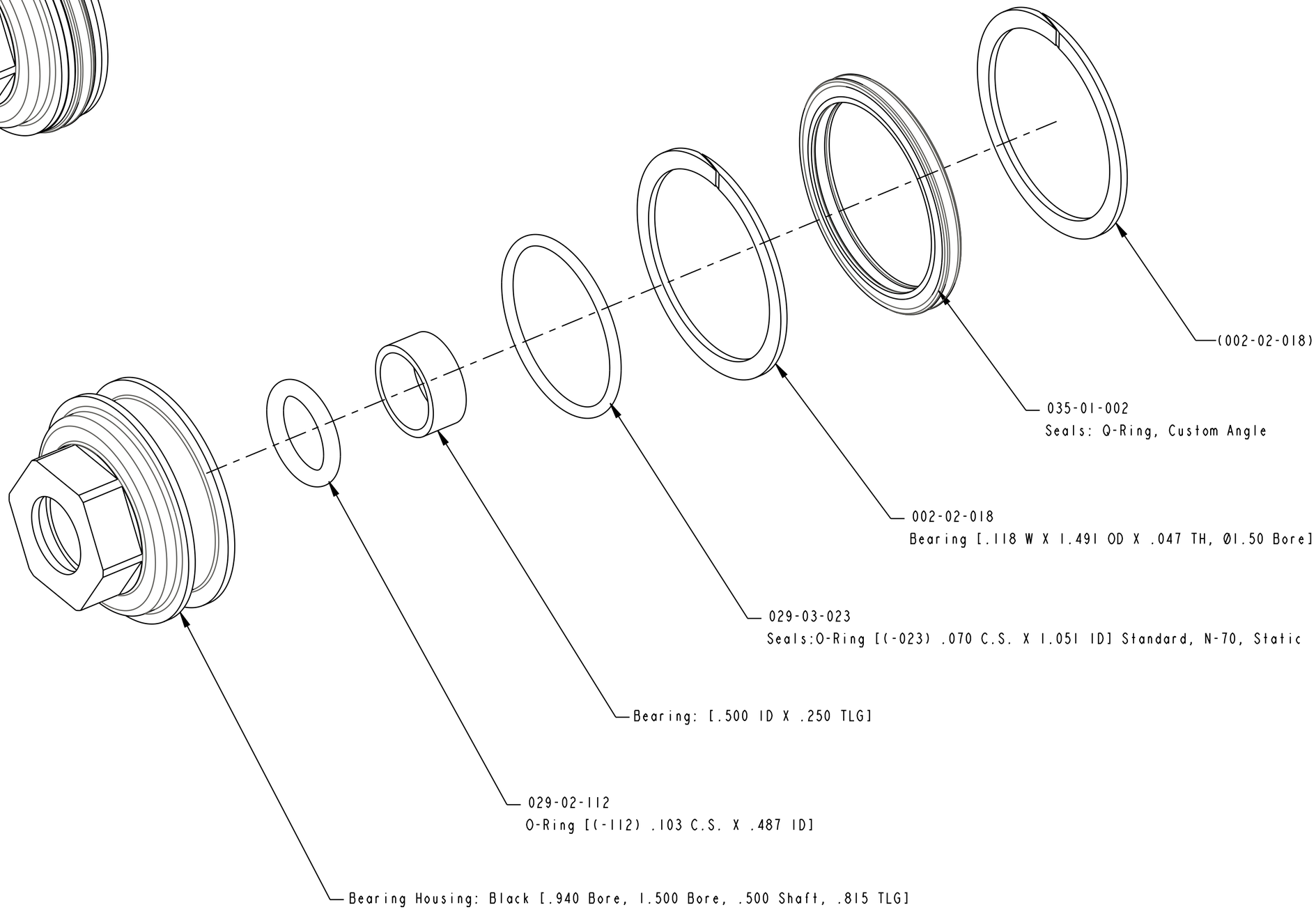

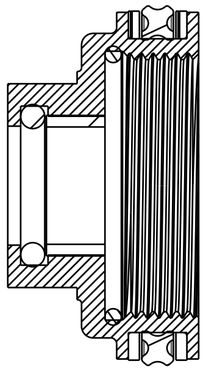

SECTION A-A

FOX Factory, Inc.
130 Hangar Way, Watsonville, CA 95076 USA
Ph 831-768-1100
Fax 831-768-9312

TITLE

Bearing Assembly: Black
[.940 Bore, 1.500 Bore, .500 Shaft, .815 TLG]

SIZE	DWG. NO.	
C	812-06-046-KIT	
PLOT SCALE 2:1		SHEET 1 OF 1

- PROPRIETARY -
THIS DOCUMENT CONTAINS CONFIDENTIAL, PROPRIETARY INFORMATION THAT IS FOX PROPERTY. DO NOT DISCLOSE TO OR DUPLICATE FOR OTHERS EXCEPT AS AUTHORIZED BY FOX.

ProE ASSEM