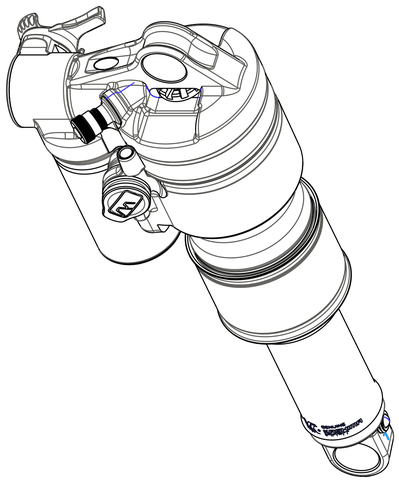

SCALE 1.000

227-09-026
Reservoir: 2014 Float X [1.070 Bore, 2.400 TLG] Black Ano, Type III

805-00-078-KIT
Piston Assembly: MY14 Floating w/ Bleed [1.070 Bore] Al 6061, Type III Clear Ano

813-00-082-KIT
Rezi End Cap Assy: Float X, Non Adjust, Wire Ring, Pellet [1.070 Bore] Black Ano III

038-01-024
Retaining Ring: Wire [1.200 OD X .040 CS]

210-22-748
Lockring: Rezi End Cap: 2014 Float X [.175 TLG, 1.200 OD] Type II, Black

GREASE: THIN LAYER SLICK HONEY

TORQUE: HAND TIGHT AFTER NITROGEN

OIL: THIN LAYER OF SILKOLINE

OIL: THIN LAYER OF FLOAT FLUID

TORQUE: 20±2 FT.LB.

2±.2cc FLOAT FLUID

GREASE: THIN LAYER OF SLICK HONEY

029-03-022
O-Ring (-022) [.070 C.S. X .989 ID]

806-29-576-KIT
Sleeve Assembly: 2018, Dual Travel 2, Float DPX2, Float X, Evol LV [4.300 TLG] Kashima, 230 X 60/65

010-00-011
Air Valve Parts: Pellet [Ø 0.275 X 0.125 TLG] nitrile durometer A 90

010-00-010
Pellet Retainer [5/16-24, .220 TLG]

TORQUE: 14±2 IN.LB.

010-01-003
Ball [Ø 0.1875] Delrin

807-72-150-KIT
Valving Assy: 2014 Float X CTD, CM, RTM

207-50-033
Body: FLOAT [Ø 0.940 Bore, 1.060 OD, 4.746 TLG] Kashima, 205(T) x 60/65

812-06-046-KIT
Bearing Assembly: Black [.940 Bore, 1.500 Bore, .500 Shaft, .815 TLG]

210-03-192
RD Adj Insert, 2014 Float X, 28deg Taper [.126 Hex, .175 TLG, 6x .059 thru]

210-90-004
Rebound Rod, (T) 2014 Float X, 4.145 TLG for 9.5 X 3.0

029-08-004
Seals: O-Ring [3.0MM ID x 1.0MM CS] Metric, N-70, Static

229-44-004
Shaft: (T) [0.345 ID X 0.498 OD X 3.855 TLG], 9.5 X 3.0, Clear Ano

GREASE: THIN LAYER SLICK HONEY

LOCTITE: RED 277

TORQUE: 110±5 IN.LB.

029-03-110
O-Ring (-110) [.103 C.S. X .362 ID]

041-15-110
Valve: [1.100 OD X .504 ID X .015 TH]

815-00-084-KIT
Assy, Bulkhead, 1/2" shaft, 5mm Travel Spacer, Red Ano, 2017, Dual Travel 2

029-10-222
Seals: Square O-Ring [(-222) .139 CS X 1.484 ID] NBR 70, Black

233-00-333
Volume Spacer: 2017 FLOAT X, FLOAT DPX2, Dual Travel 2, 1.14in^3, Green

TORQUE: 20±2 FT.LB.

LOCTITE: BLUE 242

043-10-941
Valve: [.941 OD X .675 ID X .010 TH]

039-00-054
Spring: [.440 TLG X .938 OD]

808-17-167-KIT
Eyelet Assy: 2016 Float X D-Adj

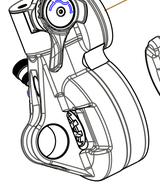

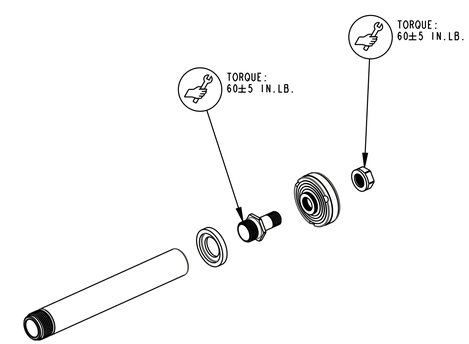

- PROPRIETARY -
THIS DOCUMENT CONTAINS CONFIDENTIAL, PROPRIETARY INFORMATION THAT IS FOX PROPERTY. DO NOT DISCLOSE TO OR DUPLICATE FOR OTHERS EXCEPT AS AUTHORIZED BY FOX.

FOX Factory, Inc.
130 Hangar Way, Watsonville, CA 95076 USA
Ph 831-768-1100
Fax 831-768-9312

TITLE
2017, Gemini, FLOAT X, K, 3pos-Adj Evol LV
Fox, Cannondale, Jekyll Carbon 1, 230, 60
1.34 Spacer, CM, RM, Climb M, Rezi CL

SIZE D | DWG. NO.

PLOT SCALE 0.75:1 | SHEET 1 OF 2